Projection

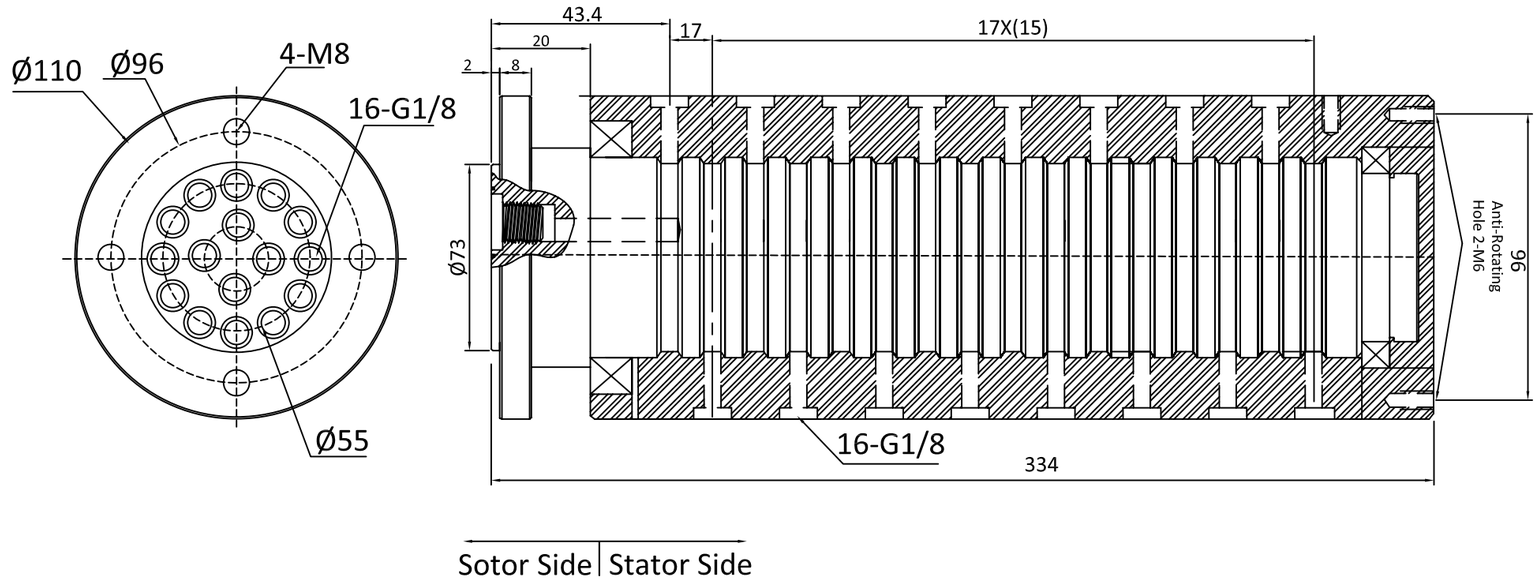

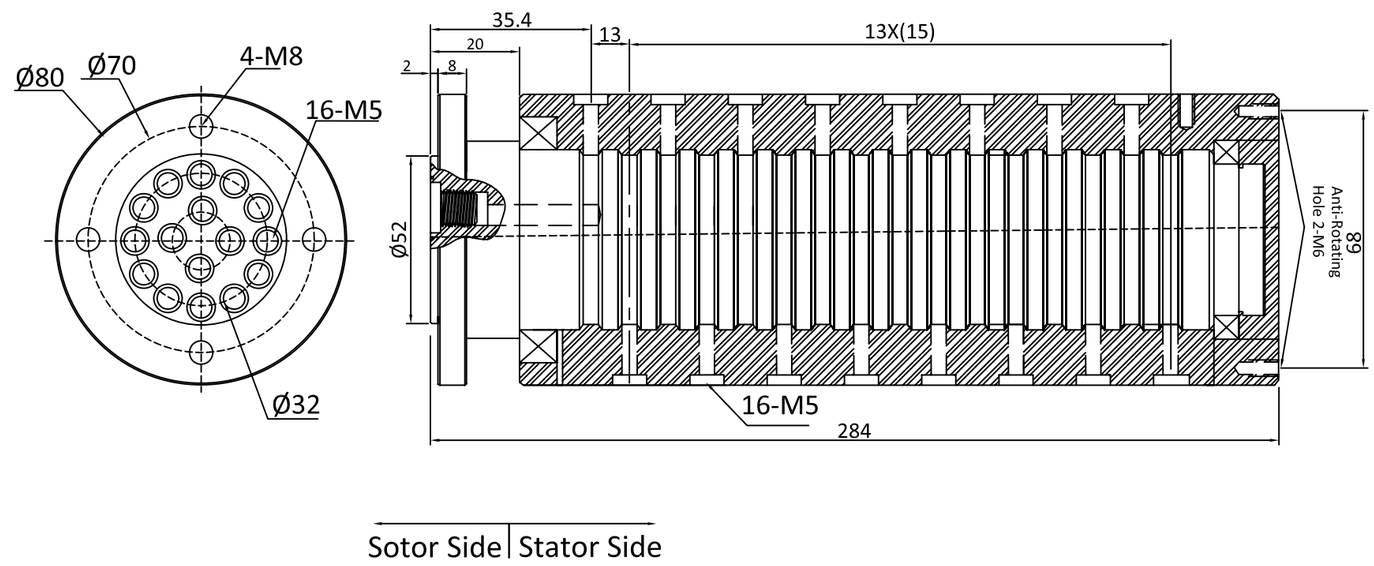

Working parameters:
Max.Speed：600RPM
Max.pressure：4500PSI
Temperature Range：5°C to 200°C
Medium type :water oil gas and so on
Materials :Stainless steel
Passage:16Passage

1						HIDNEY	Drawing	Design	Audit	Approval		seals	Dynamic seal		
2												material	Stainless steel	name	rotay joint
3				Size range	Allow poor		Date of publication					bearing	High speed ball bearing	number	NO.ONE
4	Change content		Date			HIDNEY ELECTRONICS						weight		Model	