Projection

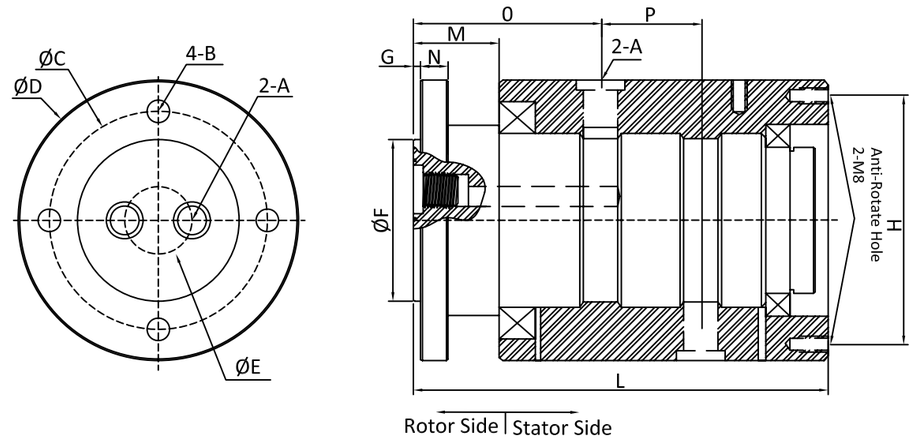

OUTLINE DIMESION			（UNIT）mm		
TYPE	DT-F-2PG-D55L77	DT-F-2PG-D60L87	DT-F-2PG-D65L95	DT-F-2PG-D70L103	DT-F-2PG-D85L177
A	M5	G1/8	G1/4	G3/8	G1/2
B	M6	M6	M6	M8	M8
C	45	50	55	60	71
D	55	60	65	70	85
E	12	15	18	21	25
F	33	38	43	48	55
G	2	2	2	2	2
H	43	48	53	56	73
M	17	17	17	20	20
L	77	87	95	103	117
N	5	5	5	8	8
0	34.4	36.4	38.4	40.4	46.4
P	12	16	20	24	29

Working parameters:
Max.Speed：600RPM
Max.pressure：4500PSI
Temperature Range： 5°Cto128°C
Medium type :water gas oil and so on
Materials :Stainless steel
Passage:2 Passage

1						HIDNEY	Drawing	Design	Audit	Approval		seals	Dynamic seal
2												material	Stainless steel
3				Size range	Allow poor		Date of publication					bearing	High speed ball bearing
4	Change content		Date			HIDNEY ELECTRONICS						weight	

	name	rotay joint	
	number	NO.ONE	
	Model		