Projection

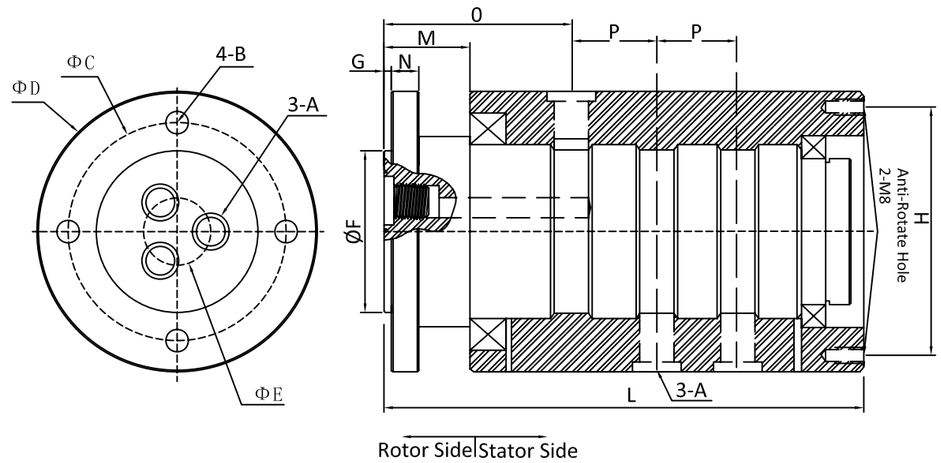

OUTLINE DIMESION （UNIT）mm

TYPE	DT-F-3PG-D55L89	DT-F-3PG-D65L103	DT-F-3PG-D65L115	DT-F-3PG-D70L131	DT-F-3PG-D85L146
A	M5	G1/8	G1/4	G3/8	G1/2
B	M6	M6	M6	M8	M8
C	45	50	60	65	73
D	55	65	70	75	85
E	12	20	23	24	30
F	33	42	48	53	58
G	2	2	2	2	2
H	43	53	58	63	71
M	17	17	17	20	20
L	89	103	115	131	146
N	5	5	5	8	8
0	34.4	36.4	38.4	40.4	46.4
P	12	16	20	24	29

Working parameters:
Max.Speed：600RPM
Max.pressure：4500PSI
Temperature Range： 5°Cto128°C
Medium type :water gas oil and so on
Materials :Stainless steel
Passage:3 Passage

1						HIDNEY	Drawing	Design	Audit	Approval		seals	Dynamic seal
2												material	Stainless steel
3				Size range	Allow poor		Date of publication					bearing	High speed ball bearing
4	Change content		Date			HIDNEY ELECTRONICS						weight	

name	rotay joint
number	NO.ONE
Model	