Projection

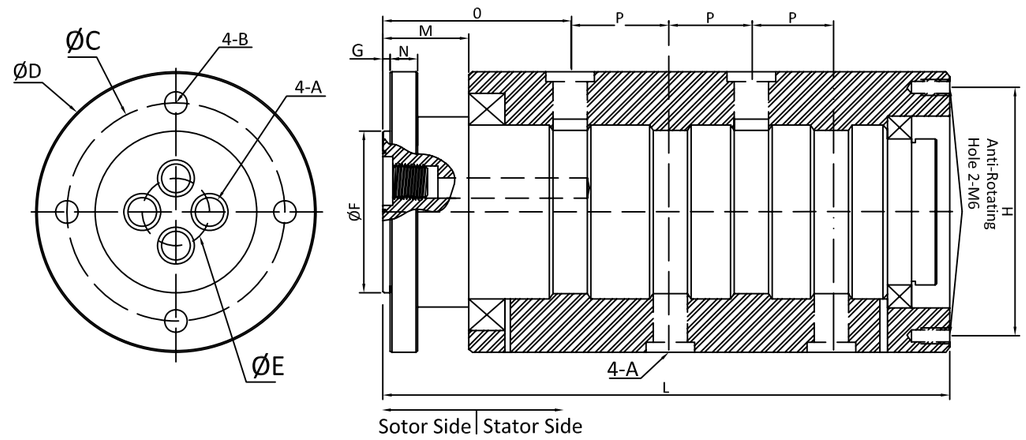

OUTLINE DIMESION					（UNIT）mm
TYPE	DT-F-4PG-D55L101	DT-F-4PG-D65L119	DT-F-4PG-D80L140	DT-F-4PG-D90L159	DT-F-4PG-D95L177
A	M5	G1/8	G1/4	G3/8	G1/2
B	M6	M6	M6	M8	M8
C	45	55	70	78	81
D	55	65	80	90	95
E	12	20	28	34	35
F	33	43	53	63	65
G	2	2	2	2	2
H	43	53	68	76	83
M	17	17	17	20	20
L	101	119	140	159	177
N	5	5	5	8	8
0	34.4	36.4	38.4	44.4	48.4
P	12	16	20	25	29

Working parameters:
Max.Speed：600RPM
Max.pressure：4500PSI
Temperature Range： 5°Cto128°C
Medium type :water gas oil and so on
Materials :Stainless steel
Passage:4 Passage

1						HIDNEY	Drawing	Design	Audit	Approval		seals	Dynamic seal		
2												material	Stainless steel	name	rotay joint
3				Size range	Allow poor		Date of publication					bearing	High speed ball bearing	number	NO.ONE
4	Change content		Date			HIDNEY ELECTRONICS						weight		Model	