Projection

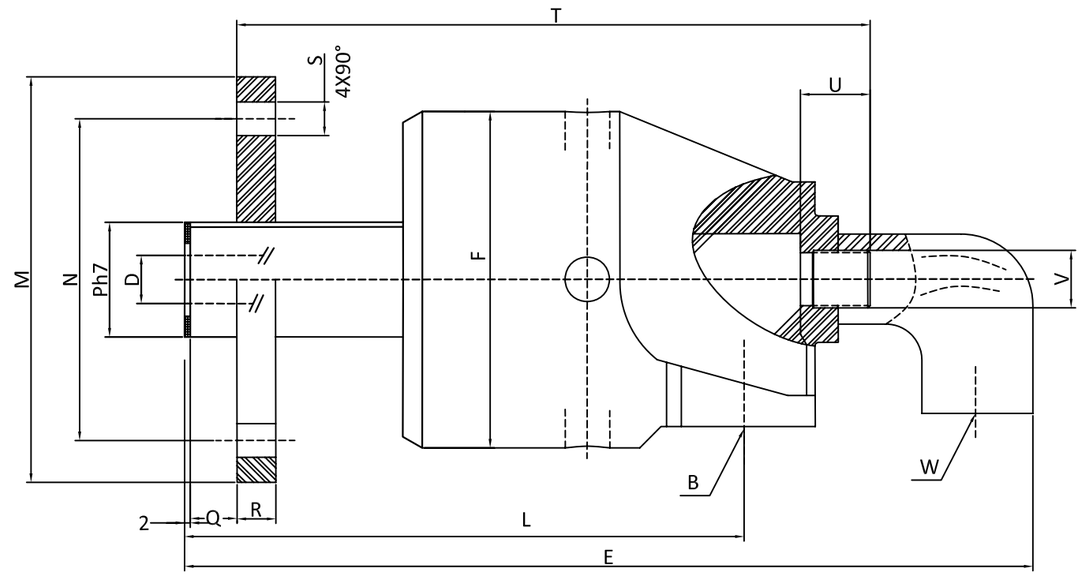

OUTLINE DIMESION （UNIT）mm

TYPE	B	DØ	E	FØ	L	MØ	NØ	PØh7	Q	R	T	V	W	S	U
QSF-G3/8	G3/8	9	132	43	82	53	38	18	6	8	106	6	G1/4	9	20
QSF-G1/2	G1/2	13	151	55	92	60	45	25	6	10	120	10	G3/8	9	22
QSF-G3/4	G3/4	18	172	64	101	68	50	30	6	10	136	13	G1/2	9	22
QSF-G1	G1	23	202	70	119	78	60	36	7	12	161	16	G1/2	9	25
QSF-G1$^{1/4}$	G1$^{1/4}$	31	225	85	133	94	70	44	8	12	176	22	G3/4	11	26
QSF-G1$^{1/2}$	G1$^{1/2}$	36	251	92	139	99	78	52	10	14	190	26	G1	11	30
QSF-G2	G2	48	282	110 G2	154	119	95	65	10	14	214	32.2	G1$^{1/4}$	11	34

Working parameters:
Max.Speed：6000RPM
Max.pressure：7500PSI
Temperature Range： 5°Cto128°C
Medium type :water gas oil and so on
Materials :Stainless steel
Passage:1 Passage

1						HIDNEY	Drawing	Design	Audit	Approval		seals	Dynamic seal		
2												material	Stainless steel	name	rotay joint
3				Size range	Allow poor		Date of publication					bearing	High speed ball bearing	number	NO.ONE
4	Change content		Date			HIDNEY ELECTRONICS						weight		Model	